Family

VitrA®

illustration is for Reference, Faucet and Accessories is not included.

Model : 4445B003-0001

Product : Family Wall Hung Multi-Purpose Basin Unit

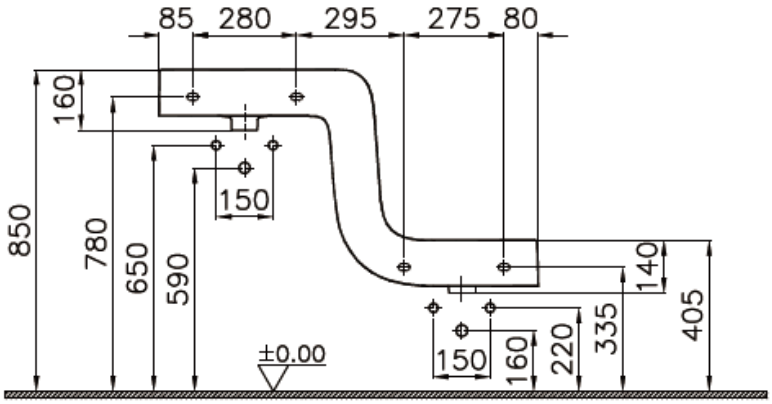

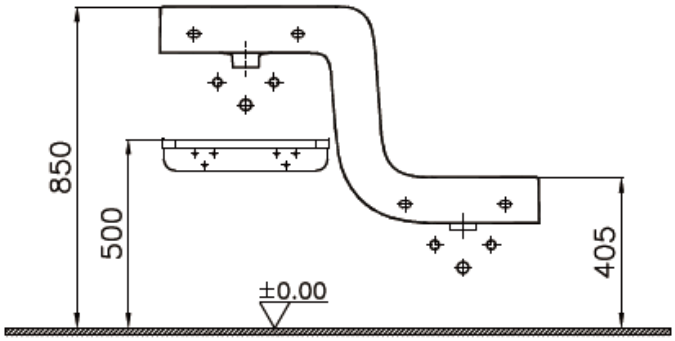

4445+340−1520

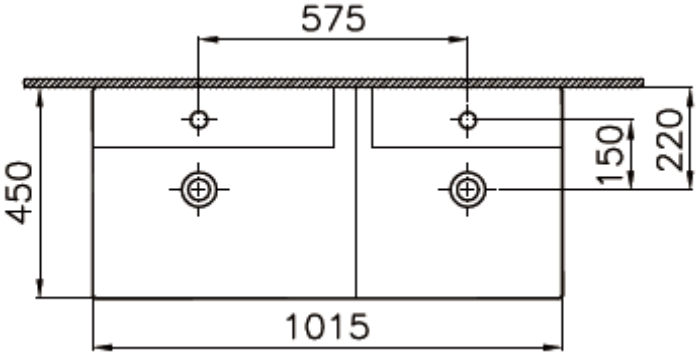

MADE IN TURKEY